DWG NO. MUE-6303 OUTLINE | SH 1

REVISIONS

ZONE	REV	DESCRIPTION	DATE	APPROVED
	–	RELEASED TO PRODUCTION	10/14/04 DCG	RO-8377 DCG
	A	ADDED NAME LABEL, REVISED NOTES	01/19/05 DCG	76057 DCG
	B	ADDED DRAIN GROMMET, REVISED LABEL	08/25/05 DCG	76063 DCG
	C	WAS BLACK POWDER COAT	06/22/06 DCG	76130 DCG
	D	WAS GREY PRIMER	07/28/06 DCG	76140 DCG
	E	REVISED TO AGREE WITH ASSEMBLY	08/18/06 MJG	76147 MJG
	F	REMOVED PLATING, ADD POWDER COAT	10/30/08 DCG	76268 DCG

5JJP0

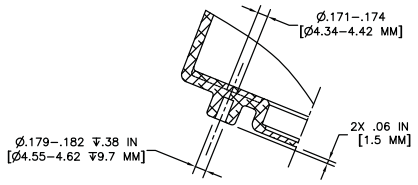

SECTION "B–B"

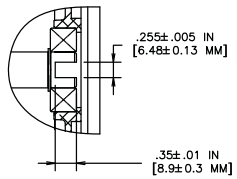

SHAFT DETAIL

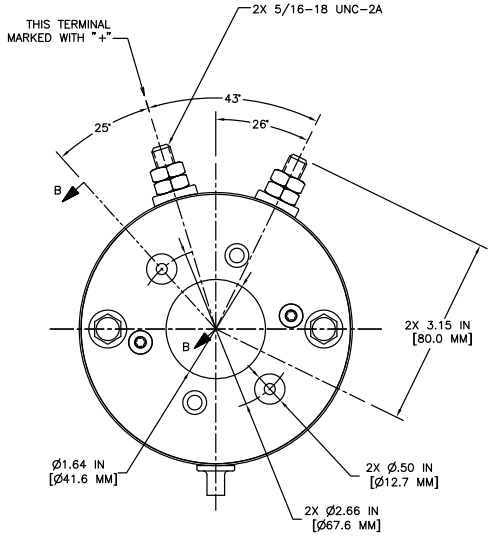

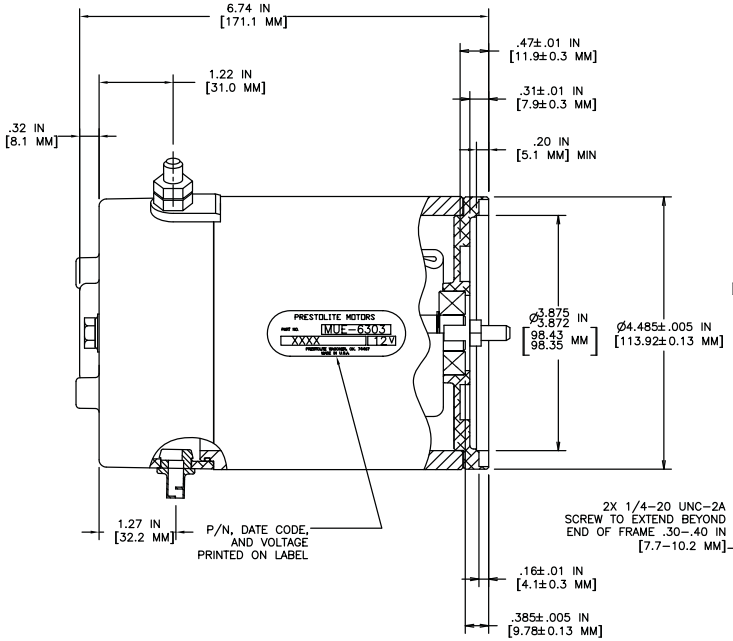

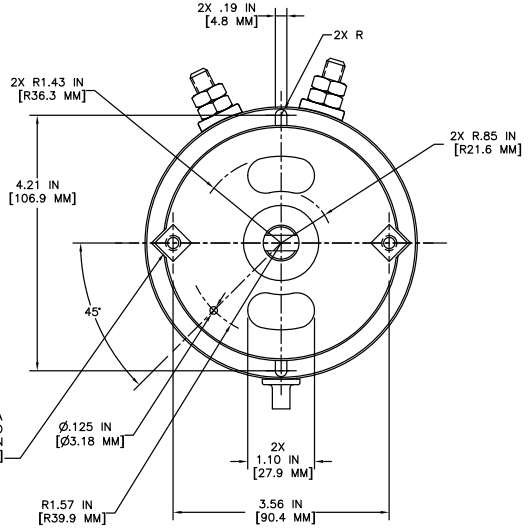

NOTES:
1. VOLTAGE: 12
2. HP: 2.14
3. RPM: 2500 MIN
4. ROTATION C.W.D.E.
5. THERMAL PERFORMANCE:
   S2: 5.3 MIN
   S3: 19%
6. PROTECTION: IP44
7. MASS: 14.12 LB
8. SUBSTRATE MUST BE FREE FROM GREASE, OIL, DIRT, OR ANY OTHER CONTAMINANTS TO ENSURE OPTIMUM ADHESION.
9. EXTERIOR FINISH: PLACK POWDER COAT.
10. END OF SHAFT HARDENED TO RC46–52.

OUTLINE DIMENSIONS ARE NOMINAL UNLESS TOLERANCES ARE SPECIFIED

PROJECTION THIRD ANGLE

THIS PRINT IS THE PROPERTY OF AMETEK AND SUPERSEDES ALL PREVIOUS REVISIONS. INTERPRET DRAWING ACCORDING TO ASME Y14.5M–1994. DO NOT SCALE – WORK TO DIMENSIONS.

NOTICE—AMETEK CLAIMS PROPRIETARY RIGHTS IN THE INFORMATION DISCLOSED ON THIS DRAWING. IT IS ISSUED IN CONFIDENCE FOR ENGINEERING INFORMATION ONLY AND MAY NOT BE USED, IN WHOLE OR IN PART, TO MANUFACTURE ANYTHING, WHETHER OR NOT SHOWN HEREON, REPRODUCED OR DISCLOSED TO ANYONE WITHOUT DIRECT WRITTEN PERMISSION FROM AMETEK.

DRAWN	DCG	DATE	07/27/04
CHKD		DATE	
ENG OK	DCG	DATE	07/27/04
		ORIG DATE	XX/XX/XX
PE NO	P–1120		
REF	MUE–6209		
OLD NO	EO–36037		

AMETEK

NAME: MOTOR, PUMP OUTLINE

SIZE D | FSCM NO | DWG NO. MUE–6303

SCALE ––– | MATL | SHEET 1 OF 1