DWG NO.	SH
MUE-6319 OUTLINE	1

REVISIONS

ZONE	REV	DESCRIPTION	DATE	APPROVED
	–	RELEASED TO PRODUCTION	08/18/09 DCG	RO-8460 DCG

5JJP2

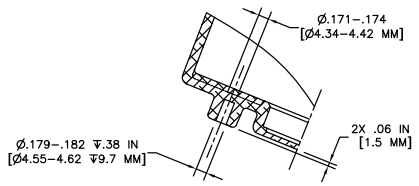

SECTION "B–B"

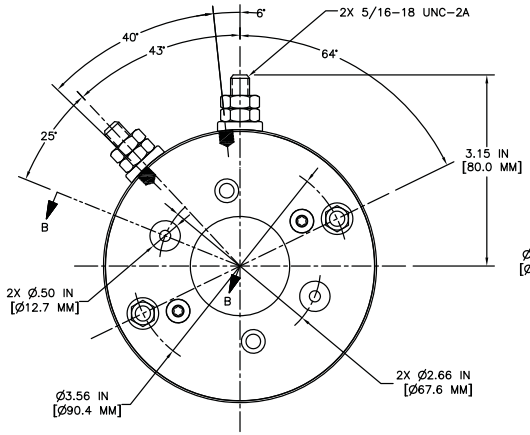

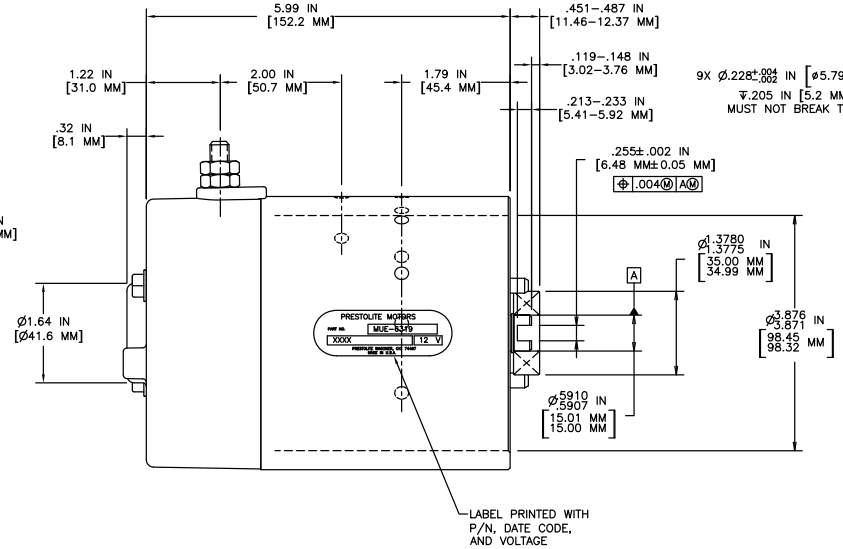

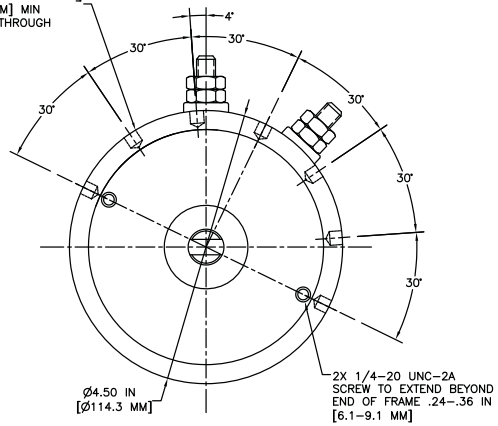

NOTES:
1. VOLTAGE: 12V
2. ROTATION: CCWDE.
3. PERFORMANCE CURVE: CU–2403.
4. FINISH: BLACK PAINT.
5. END OF SHAFT HARDENED TO RC 46–52.

OUTLINE DIMENSIONS ARE NOMINAL UNLESS TOLERANCES ARE SPECIFIED

PROJECTION THIRD ANGLE

THIS PRINT IS THE PROPERTY OF AMETEK AND SUPERSEDES ALL PREVIOUS REVISIONS. INTERPRET DRAWING ACCORDING TO ASME Y14.5M–1994. DO NOT SCALE – WORK TO DIMENSIONS.
[redacted]

NOTICE—AMETEK CLAIMS PROPRIETARY RIGHTS IN THE INFORMATION DISCLOSED ON THIS DRAWING. IT IS ISSUED IN CONFIDENCE FOR ENGINEERING INFORMATION ONLY AND MAY NOT BE USED, IN WHOLE OR IN PART, TO MANUFACTURE ANYTHING, WHETHER OR NOT SHOWN HEREON, REPRODUCED OR DISCLOSED TO ANYONE WITHOUT DIRECT WRITTEN PERMISSION FROM AMETEK.

DRAWN DCG	DATE 08/18/09	AMETEK
CHKD	DATE	NAME MOTOR, PUMP OUTLINE
ENG OK DCG	DATE 08/18/09	
	ORIG DATE	
PE NO		SIZE D / FSCM NO / DWG NO. MUE-6319
REF		
OLD NO		SCALE ––– / MATL / SHEET 1 OF 1