Uncontrolled Copy

REV	ECO	REV BY	DATE	APPD	DATE
D	0026383	Y.PENG	05-28-2012	B.SHEN	05-28-2012

GENERAL INFORMATION:

SHAFT RUNOUT:	.001[.03] T.I.R. PER INCH LENGTH OF EXTENSION
END PLAY:	.010[.25] TO .063[1.60]
BEARINGS:	SLEEVE
MOUNTING POSITION:	VERTICAL – SHAFT DOWN

ELECTRICAL DATA:

OVERLOAD PROTECTOR:	AUTOMATIC RESET (T.I. 7AM 304)
LEADS:	NO. 18 GA., .06[1.5] THK., EPDM 125°C INSULATION

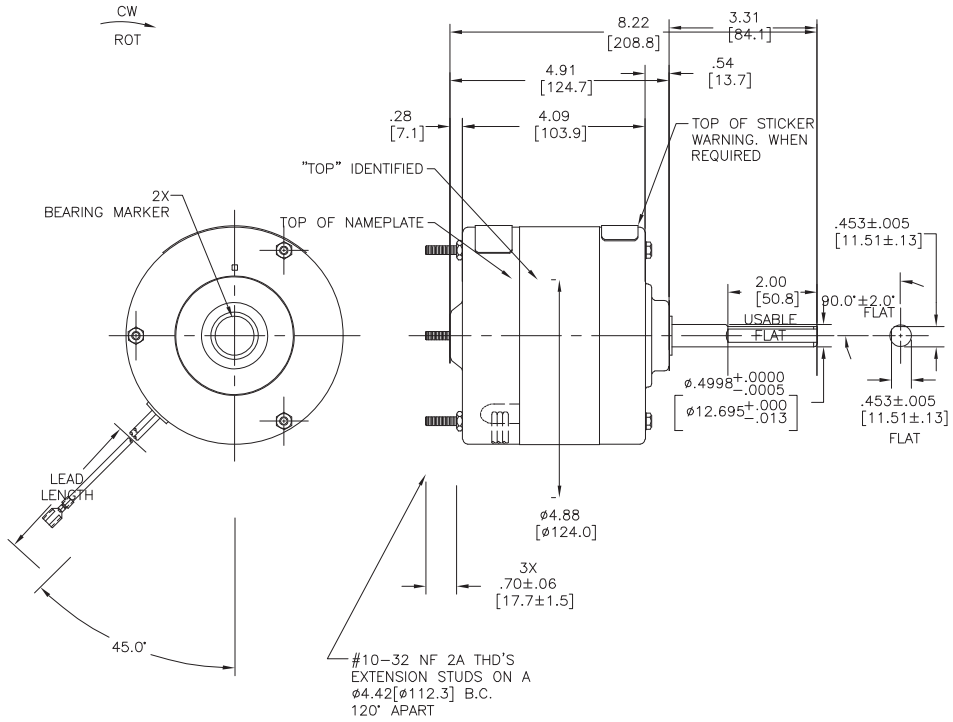

NAMEPLATE DATA:	EXTERNAL CONNECTION DIAGRAM
MODEL NO.: F42B59A01 CUST. P/N: HP: 1/5 ROT.: CWLE RPM: 1075 OMC6517 TYPE: FLL FRAME: VOLTS: PH: 1 AMPS: 1.5 HZ: 60 42Y 208–230 INS.: B* AMB.: 40° C DUTY: AIR OVER CAP.: 5 MFD/ 370V ENCL: – UL LOGO CSA LOGO THERMALLY PROTECTED TYPE C	YEL RED BLK LINE

PERFORMANCE CURVE NO.	TORQUE @ 1075 RPM (25°C)	APPROVED SAMPLE	UL COMPONENT		CSA	
			FILE #	CCN #	FILE #	CLASS #
C30106	25.4 OZ. FT.	322P859	E46412	PRGY2	LR43341	4211–01

YELLOW	34.5/37.5 [876/953]	.25[6.4] FEMALE SPADE
RED	34.5/37.5 [876/953]	.25[6.4] FEMALE SPADE
BLACK	34.5/37.5 [876/953]	.25[6.4] FEMALE SPADE
COLOR	LENGTH	TERMINAL OR STRIP LENGTH

LEAD DATA

MAIN FRAME – OLE	ENCLOSED
END FRAME – OLE	OPEN
MAIN FRAME – LE	ENCLOSED
END FRAME – LE	ENCLOSED

ENCLOSURE

CUSTOMER	DISTRIBUTION SERVICES

GEOMETRIC CHARACTERISTICS & SYMBOLS
- FLATNESS
- STRAIGHTNESS
- ANGULARITY
- PERPENDICULARITY (SQUARENESS)
- PARALLELISM
- ROUNDNESS (CIRCULARITY)
- CYLINDRICITY
- PROFILE OF ANY SURFACE
- PROFILE OF ANY LINE
- RUNOUT
- TRUE POSITION
- CONCENTRICITY
- SYMMETRY

ASME Y14.5M 1994

REGAL–BELOIT CORPORATION (RBC) PROVIDES TECHNICAL ASSISTANCE TO OUR CUSTOMERS IN SEVERAL AREAS. SINCE RBC DOES NOT RECEIVE ALL DATA CONCERNING THE USE AND APPLICATION OF THE MOTOR, THE SUITABILITY OF THE MOTOR FOR THE APPLICATION MUST BE DETERMINED BY THE CUSTOMER.

DIMENSIONS WITHOUT TOLERANCES ARE FOR REFERENCE ONLY.

DR BY: HEATH	11–08–1993
APPD: .	.
THIRD ANGLE PROJECTION	EDS DATE 11–11–2011
	FORMAT REV H

CONFIDENTIAL: THIS DRAWING AND ITS INFORMATION ARE THE EXCLUSIVE AND CONFIDENTIAL PROPERTY OF REGAL–BELOIT CORPORATION AND ARE NOT TO BE DISCLOSED, DUPLICATED, DISTRIBUTED OR OTHERWISE USED WITHOUT THE WRITTEN CONSENT OF REGAL–BELOIT CORPORATION. –ALL RIGHTS RESERVED.

REGAL–BELOIT CORPORATION

DESCRIPTION: MODEL–RFHP–48FR OUTLINE

SIZE: C | DWG NO: 11737–002

SCALE: NONE | SHEET 1